PX-328S

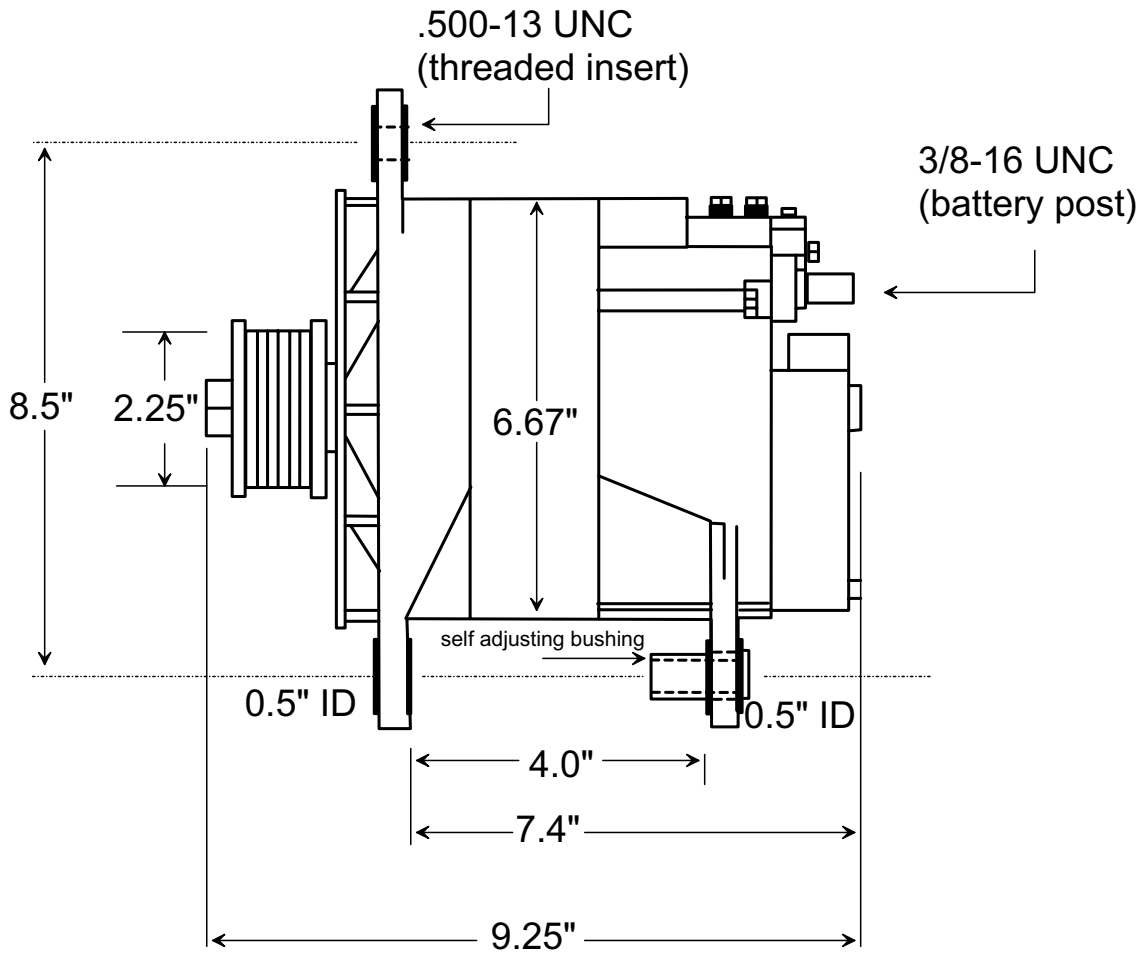

NOTE:

ALL DIMENSIONS ARE LISTED FOR QUICK REFERENCE. CONTACT PENNTEX FOR PRECISE MEASUREMENTS IF REQUIRED FOR BRACKETS OR SPECIAL APPLICATIONS.

PennTex INDUSTRIES, INC.

DATE: 01-14-2008

DRAWING BY DMc

Scale: None

PX-3S-285 ALTERNATOR FROM PX-328S KIT, 14 VOLT, 285 AMP, J-180 MOUNT