CORPORATE ADDRESS:
202 Plaza Drive, Manchester, PA 17345

web site: www.penntexusa.com
email: tech@penntexusa.com

SHIPPING/ MANUFACTURING ADDRESS:
7620 Flagstone, Ft. Worth, TX 76118
Ph. 817-590-2818, Fax: 817-590-0505
Warranty Toll-Free Line: 877-590-7366
Warranty Fax Line: 817-590-0398

SERVICE WARRANTY PROCEDURE

Utilizing the PX-4000, PX-5000, or PX-6000 Regulator

In order to validate the PennTex warranty, PennTex Industries, Inc. must be contacted before doing any charging system repair or diagnosis. We at PennTex understand that the vehicle owner/end user wants to get their vehicle fixed as soon as possible. To help you do this, PennTex Industries, Inc. has a procedure for you to follow. (For more information, see "How a PennTex Warranty is done" on the "Warranty" page at **www.penntexusa.com**.) Do not purchase parts first.

ONE: **Complete the attached 4-section Charging System Test with the regulator connector plugged in.** Do not have a battery charger connected while the tests are going on. The battery charger will change the voltage readings and make your test voltages invalid. All PennTex charging systems utilize a 6 or 7 foot-long wire harness connected to an external voltage regulator that's usually mounted inside the vehicle under the right side of the dash. On some Arboc buses, the regulator is mounted behind a headlight. ***VERY IMPORTANT*: The 4-section charging system test must be done with a digital voltmeter at the regulator, with the regulator 4-wire connector plugged in**, on the Blue, Orange, Red and Brown wire terminals. Voltage readings taken at the alternator connectors may be different and do not apply in this test. Wire color codes are Blue: rotor voltage; Orange: stator voltage; Red: battery voltage; Brown: regulator turn-on voltage (1.75 volts or more with key on.) **The test is done 4 times: First:** Ignition off (key off), **Second:** Ignition on (key on, engine not running), **Third:** Engine on (key on, at engine idle), **Fourth:** Engine on, (key on at High Idle of approximately 1000 rpm + -).

TWO: **Complete the attached Full Field Test. Disconnect the regulator 4-wire connector**. Do the Full-Field Test at the disconnected regulator connector. All accessories should be OFF during these tests. Record your results. When these two tests are completed, **fax 3 pages: (A) the 4-Section Test, (B) the Full-Field Test, and (C) the PennTex Warranty Claim Form to 1-817-590-0398** for review. A back-up fax number is 1-817-590-0505 or tech@penntexusa.com by email.

THREE: **We will contact you.** PennTex will review the readings to determine if the failure is the regulator, alternator, harness/ connections, batteries, or a possible combination of failures. This might be done by a shipment notification if parts are shipped.

FOUR: **We will ship the replacement part(s) to you**. PennTex Industries, Inc. will pay for UPS shipment of these replacement parts from the Fort Worth, Texas plant. UPS Ground is standard but different shipping might be used at our discretion. You can choose to upgrade to UPS Next-Day/ 2nd-Day air service but you are responsible for paying the extra charge for this above the covered UPS Ground charge. That amount will be deducted from any submitted labor claim. There is no freight allowance for shipments outside of the USA and Canada.

FIVE**: We want the old parts back.** PennTex pays for return of the old parts and a UPS return label is included with the replacement parts. A Returned Goods Authorization (RGA) number to authorize the return of the defective part(s) is assigned when we send your replacement parts. UPS package pickup policy has recently changed. Please indicate on your Warranty Claim Form whether or not a UPS driver makes daily pickups at your location. If a daily pickup is not made, the returning parts will need to be taken to a UPS Store for return to PennTex.

VERY IMPORTANT: Place a completed copy of your Service Repair Invoice (Labor Bill) and a copy of your PennTex Warranty Claim Form in the box with the defective part(s) being returned**.** We must have a numbered Service Repair Invoice (labor bill) to pay you. ***NOTE:*** Burned output posts, brushes, belts, loose belts, batteries, tax, and towing are not covered. Alternators that have been painted, sandblasted, disassembled, reclocked, or rebuilt using non-PennTex parts are excluded from any warranty coverage. PennTex will assist with labor charges based on the attached flat rate time allowance schedule.

SIX: Use the prepaid UPS shipping label to send your paperwork and old PennTex parts back to the PennTex Ft. Worth, Texas address only. Any return parts shipping cost reimbursement is based on UPS Ground shipping rates. Other types of return shipping costs are subject to deduction from your labor reimbursement. Parts returned to the Penntex address in Pennsylvania will have to be refused. Only after we have received the defective parts and your Service Repair Invoice (labor bill) can any credits or labor claims be processed. An average amount of time from when you send your parts back to issue of labor payment is about 21 days. 09-08-2015

PENNTEX INDUSTRIES, INC.

PX-4000, PX-5000 & PX-6000 REGULATOR

4-STEP & FULL-FIELD TEST BASIC INFORMATION

THE FOUR-STEP TEST IS DONE WITH EVERYTHING PLUGGED IN

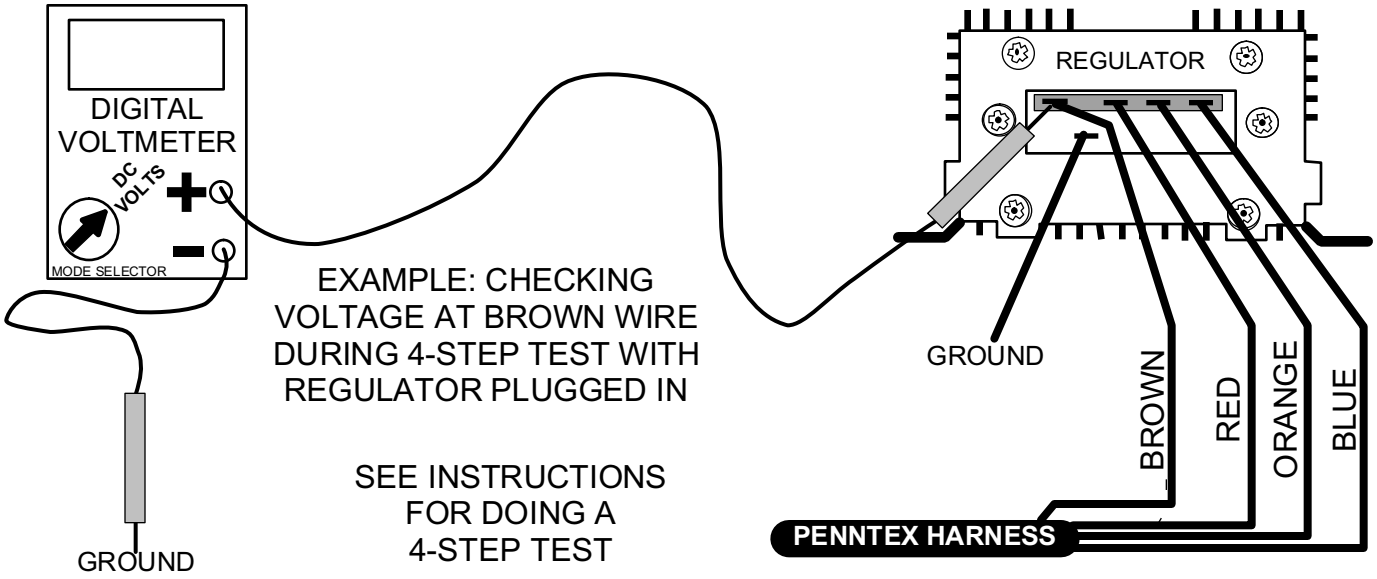

THE FULL-FIELD TEST IS DONE AT THE REGULATOR 4-WIRE CONNECTOR WITH IT DISCONNECTED FROM THE REGULATOR

NO VOLTAGE TESTS ARE DONE AT THE DISCONNECTED REGULATOR AT ANY TIME

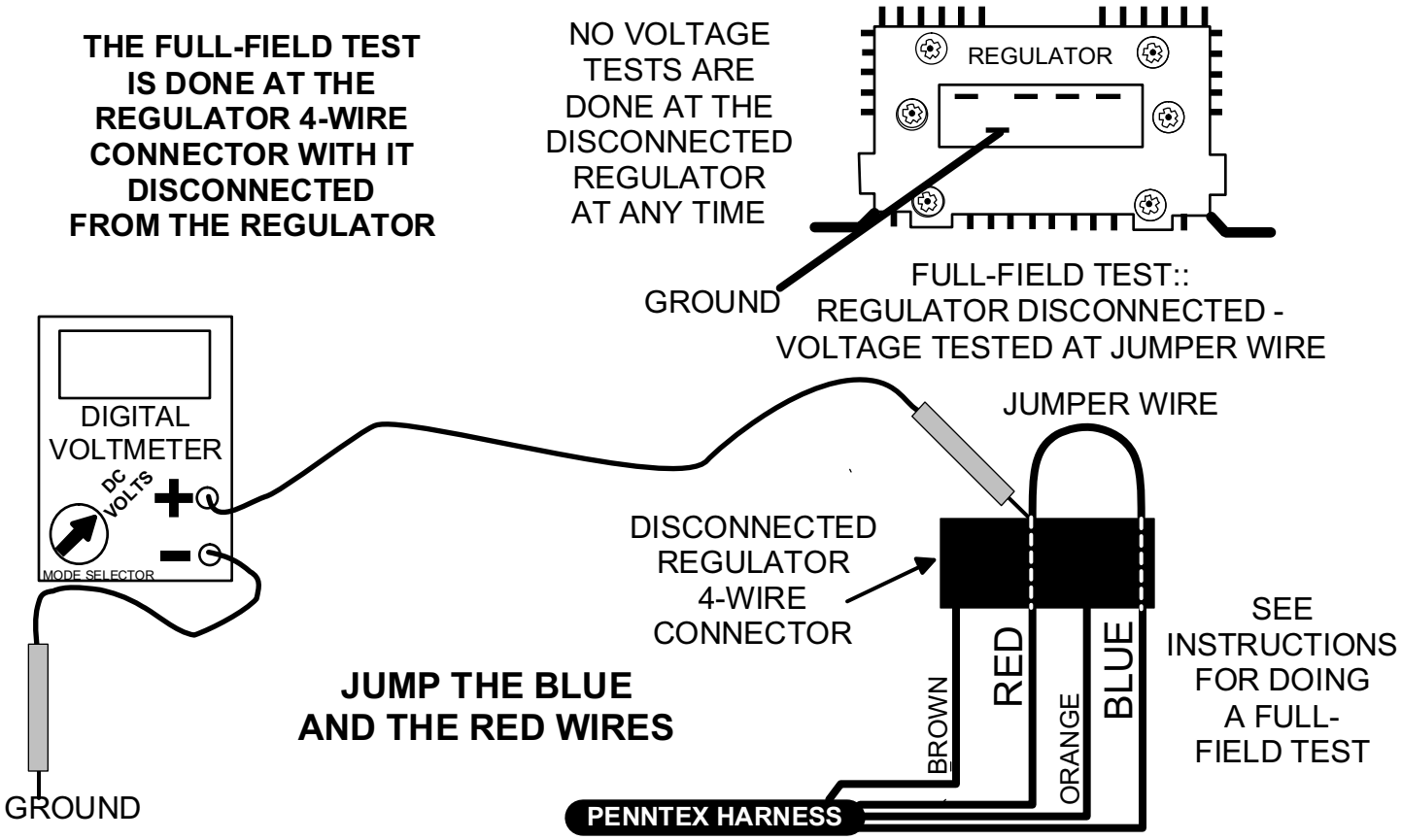

PENNTEX INDUSTRIES, INC. TECH LINE: 877-590-7366 / 817-590-2818
FAX: 817-590-0398
web site: www.penntexusa.com tech@penntexusa.com

10-17-11

CHARGING SYSTEM TEST FOR VEHICLES WITH A PX-4000, PX-5000, OR PX-6000 REGULATOR

Your Company Name_____

Testers Name_____

Phone _____**Ext.**_____

Fax_____

Alternator Model # _____

Alternator Serial #_____

Regulator Model #_____

Regulator Serial #_____

Vehicle Mileage_____

Vehicle Year_____**Make**_____**Engine**_____

Vehicle In-Service Date: _____

PennTex INDUSTRIES, INC.

Technical Support Toll Free 1-877-590-7366
Technical Support Fax 1-817-590-0398

Labor Assistance Flat Rate
Warranty Schedule

Test Charging System using this form: 1/2 (.5) Hour

R & R Alternator: 1 Hour

R & R Regulator: 1/2 (.5) Hour

Any additional time is not payable by PennTex Industries.

Your Shop Hourly Rate

$_____

IF YOUR REGULATOR HAS DIFFERENT CONNECTIONS THAN THIS, CONTACT PENNTEX FOR A DIFFERENT TEST.

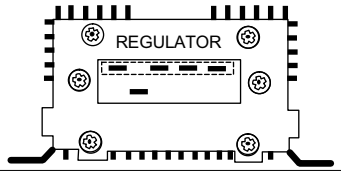

The regulator is usually located inside the vehicle under the right side of the dash or behind the unused passenger-side airbag panel.

Ground Terminal:

_____**ohms**

# of Batteries:

_____

Engine Idle :

_____**rpm**

Engine High Idle:

_____ **rpm**

DO THE 4-STEP TEST WITH EVERYTHING PLUGGED IN

Locate the external voltage regulator. Make sure that everything is properly connected and that the regulator has a good ground. Starting with Test # 1 using a digital voltmeter, check the voltage at each terminal and write the voltage in the box. Do the same with tests 2, 3 & 4.

Regulator Terminals ↓	Test # 1 Ignition Off Engine Off	Test #2 Ignition On Engine Off	Test # 3 Ignition On Engine On	Test #4 Engine On High Idle
Field Terminal (Blue Wire) "F"	_____volts	_____volts	_____volts	_____volts
Stator Terminal (Orange Wire) "S"	_____volts	_____volts	_____volts	_____volts
Sense Terminal (Red Wire) "A"	_____volts	_____volts	_____volts	_____volts
Ignition Terminal (Brown Wire)	_____volts	_____volts	_____volts	_____volts
Battery Terminal	_____volts	_____volts	_____volts	_____volts

PENNTEX INDUSTRIES, INC.

PX-4000, PX-5000 & PX-6000 REGULATOR

FULL-FIELD TEST

A PX-7000 REGULATOR USES A DIFFERENT TEST

THIS IS A GROUND TERMINAL. DO NOT CONNECT POWER TO THIS TERMINAL OR THE REGULATOR WILL BE PERMANENTLY DAMAGED.

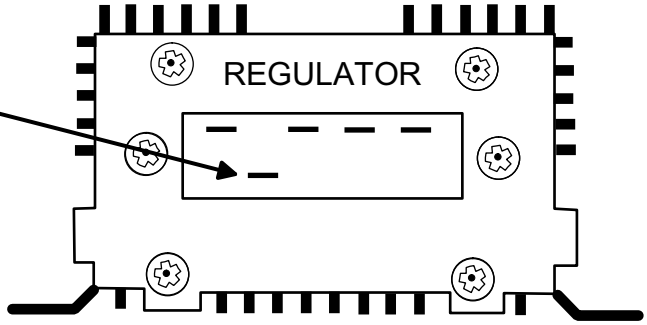

THESE REGULATORS ARE MANUFACTURED IN OUR FT. WORTH,TX PLANT.

YOU MAY SEE A SPARK WHEN CONNECTING THE JUMPER

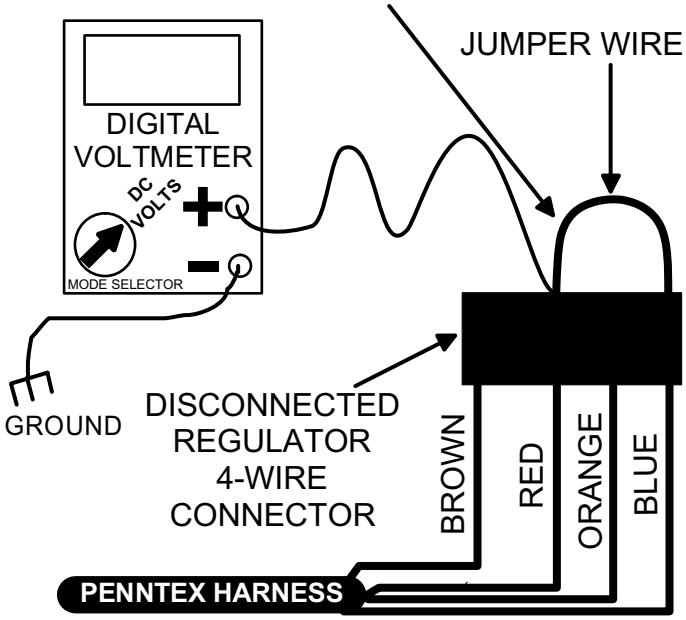

FULL-FIELD TEST PROCEDURE:

THIS TEST ALLOWS THE ALTERNATOR TO CHARGE UNREGULATED. IF THE ALTERNATOR IS BAD, THE VOLTAGE WILL NOT INCREASE.

1) TURN OFF ALL ACCESSORIES.
2) LOCATE THE VOLTAGE REGULATOR.
3) **DISCONNECT THE 4-WIRE CONNECTOR.**
4) JUMP THE BLUE AND RED WIRES.
5) START THE VEHICLE & RUN AT IDLE.
6) AFTER IT RUNS FOR 5 SECONDS, CHECK THE VOLTAGE AT THE RED WIRE.
7) THAT VOLTAGE IS: _____
8) RAISE ENGINE RPM TO 1000 RPM.
9) CHECK VOLTAGE AT RED WIRE.
9) THAT VOLTAGE IS NOW: _____
10) SHUT ENGINE OFF.
11) REMOVE JUMPER WIRE. IT COULD BE HOT.

NOTE: DO NOT LET ENGINE RUN MORE THAN 10 OR 15 SECONDS IN FULL-FIELD MODE. DAMAGE TO TEST LEADS OR VEHICLE ELECTRICAL SYSTEM CAN RESULT.

(OLD VOLTMETER BATTERIES WILL AFFECT VOLTAGE READINGS ON SOME METERS)

AFTER COMPLETING THIS TEST AND THE FOUR-STEP VOLTAGE TEST, FAX THEM TO OUR TECHNICAL DEPARTMENT AT 817-590-0398.

PENNTEX INDUSTRIES, INC. TECH LINE: 877-590-7366
TECH FAX: 817-590-0398
(ALTERNATE FAX: 817-590-0505)
email: tech@penntexusa.com

06-19-2014

CORPORATE OFFICE:
202 Plaza Dr., Manchester, PA 17345

Web site: www.penntexusa.com
email: sales@penntexusa.com
tech@penntexusa.com
May 2015

MANUFACTURING PLANT:
7620 Flagstone, Ft. Worth, TX 76118
Service/ Tech Toll-Free Line: 877-590-7366
Service/ Tech Fax Line: 817-590-0398

PENNTEX WARRANTY CLAIM FORM FOR DOWNLOAD

******** Note: *BOLD-ITALICIZED* areas are required fields for proper warranty evaluation. ********

CLAIM DATE: _____

Alternator Model #: PX-	***SERIAL #:***
Regulator Model #: PX-	***SERIAL #:***

SHOP NAME: _____ ***PHONE #:*** _____

CONTACT: _____ ***ADDRESS:*** _____

CITY: _____ ***STATE:*** _____ ***ZIP:*** _____ ***FAX#:*** _____

EMAIL ADDRESS: _____

YOUR REPAIR ORDER # _____ YOUR SHOP FLAT RATE: $_____ PER HOUR

Note: FOR US TO COMPLETE YOUR WARRANTY PAPERWORK, THIS FORM AND A FINAL COPY OF YOUR REPAIR INVOICE NEED TO BE RETURNED WITH YOUR OLD PARTS. REIMBURSEMENT FOR COVERED LABOR REQUIRES A NUMBERED INVOICE BECAUSE YOU ARE NOT REIMBURSED FROM THIS WARRANTY FORM ALONE.

VEHICLE OWNER (END USER) DATA: ***VEHICLE OWNER:*** _____

CONTACT: _____ ***PHONE NUMBER:*** _____

VEHICLE DATA: VEHICLE #_____

OEM MANUFACTURER: _____ ***YEAR:*** _____ ***MODEL:*** _____ ***ENGINE***: _____

VIN # _____ ***MILEAGE:*** _____ **BUILD DATE:** _____

BODY MANUFACTURER: _____ ***VEHICLE IN-SERVICE DATE***: _____

PennTex pays UPS Ground freight charges. If you want faster shipping, the difference in costs between Ground and Air can be deducted from your labor payment. Circle the appropriate shipping below: If nothing is circled then UPS Ground is used.

UPS Ground ***UPS 3 Day*** ***UPS 2 Day*** ***UPS Next Day*** ***UPS Next Day (Saturday)***

PennTex includes a prepaid UPS return tag to send back your defective parts. Please highlight this box if you have an everyday UPS pickup at your address. ☐

If you do not have daily UPS pickup, Highlight the box on the right. ☐

(Note: ALTERNATORS WITH BURNED OUTPUT POSTS ARE NOT COVERED BY WARRANTY. ALTERNATORS THAT HAVE BEEN PAINTED, SANDBLASTED, OR REBUILT USING NON-PENNTEX PARTS ARE AUTOMATICALLY EXCLUDED FROM ANY WARRANTY COVERAGE.) ANY ADDITIONAL INFORMATION:

YOUR TOTAL LABOR AMOUNT (IF KNOWN)

$ _____

Note: *BOLD-ITALICIZED* areas are required fields for proper warranty evaluation.

RETURN A COPY OF THIS COMPLETED FORM, YOUR FINAL INVOICE, AND THE DEFECTIVE PARTS TO THE FT. WORTH, TX ADDRESS. YOU WILL BE BILLED FOR ANY PARTS NOT RETURNED. PROCESSING STARTS WHEN THE PARTS AND PAPERWORK ARE RETURNED. WE CAN NOT PROCESS ANY LABOR CLAIM OR INVOICE SENT IN MORE THAN 90 DAYS FROM ORIGINAL WARRANTY REQUEST.

PennTex
INDUSTRIES, INC.
www.penntexusa.com

Corporate Office
202 Plaza Drive, Manchester, PA 17345-1340
voice: (717) 266-8762 fax: (717) 266-7803
e-mail: penntexusa@verizon.net

Manufacturing Facility
7620 Flagstone Drive, Fort Worth, TX 76118
voice: (817) 590-2818 fax: (817) 590-0505
e-mail: info@penntexusa.com

November 29, 2005

To: Service Center Managers

Subject: Labor Billing

PennTex Industries, Inc provides Labor Reimbursement Assistance for ordinary and customary charges to help offset the overall charges a customer may encounter when warranty work is being performed. This assistance is limited and may not cover all your charges to the customer.

When invoicing PennTex Industries, Inc. for Labor Assistance Reimbursement regarding warranty work, please be advised to not include any towing, shop supplies, parts, sales tax, freight charges or any other miscellaneous charges. As addressed in our warranty information packet that is faxed to a service facility before work has begun, such items will not be paid.

Should you have any questions regarding our Labor Reimbursement Assistance, please contact PennTex with those questions before any warranty work begins. We can be reached toll free at 877-590-7366, or by fax to our Warranty Service and Technical Department at 817-590-0398.

Thank you,

PennTex Industries, Inc.

Revised: July 2009 RH

PennTex INDUSTRIES, INC.

MANUFACTURERS LIMITED WARRANTY

EFFECTIVE MAY 01, 2008

Corporate Office:
202 Plaza Dr., Manchester, PA 17345
Ph: 717-266-8762; Fax: 717-266-7803
www.penntexusa.com

Manufacturing Plant:
7620 Flagstone Dr., Ft. Worth, TX 76118
Ph: 877-590-7366; Fax: 817-590-0398
email: warranty@penntexusa.com

PennTex Industries, Inc. warrants each new PennTex product to be free of defects in material and workmanship under normal use and service. The length of the warranty period may be determined by referring to the Warranty Period Schedule listed below. To place a warranty claim, you must follow PennTex Warranty procedures. Call PennTex first before removal or diagnostics of any PennTex product. Our factory-trained personnel will assist you through the testing and paperwork processes.

The warranty commences upon delivery of the vehicle or product to the customer. Proof of New Vehicle Delivery date or product purchase will be required. Warranty is to the original vehicle owner or product purchaser and is not transferable. Warranty covers failure due to defects in material and workmanship for the following months/miles-- whichever comes first:

WARRANTY PERIOD SCHEDULE

Component Model	New OEM Installation	New Aftermarket/Replacement
Model PX-2 Series	Eighteen (18) Months or 75,000 miles	Twelve (12) Months/Unlimited miles
Model PX-3 Series	Eighteen (18) Months or 75,000 miles	Twelve (12) Months/Unlimited miles
Model PX-4 Series	Eighteen (18) Months or 75,000 miles	Twelve (12) Months/Unlimited miles
Model PX-5 Series	Eighteen (18) Months or 75,000 miles	Twelve (12) Months/Unlimited miles
Model PX-6 Series	Eighteen (18) Months or 75,000 miles	Twelve (12) Months/Unlimited miles
Model PX-7 Series	Eighteen (18) Months or 75,000 miles	Twelve (12) Months/Unlimited miles
Model PX-8 Series	Twenty-four (24) Months/Unlimited miles	Twelve (12) Months/Unlimited miles
High Idler and CSM	Eighteen (18) Months or 75,000 miles	Twelve (12) Months/Unlimited miles

NOTE: All PennTex products sold or used outside of the continental United States of America, Canada, and Hawaii, including military use applications, have no warranty expressed or implied unless otherwise specified.

All Canadian OEM and Aftermarket installations of new PennTex products have a limited warranty that does not include any labor or freight allowance.

All Aftermarket sales of replacement parts and regulators have a 90-day warranty that does not include any labor or freight allowance.

This warranty does not apply to loss of the vehicle or equipment, loss of time, inconvenience or other incidental or consequential damages.

PennTex does not assume responsibility for loss of use of the vehicle, loss of time, towing, telephone, travel, lodging, inconvenience, loss of revenues, or cost of a replacement rental vehicle.

PennTex shall not be liable for incidental or consequential damages arising out of, or from the uses of PennTex products by the buyer, its assignees, employees, agents, or customers.

PennTex requires that original PennTex parts be used in all repairs and requests that the factory or an authorized repair station be used.

Defective or malfunctioning products must be delivered prepaid to an authorized repair station during regular business hours or shipped to the factory, prepaid, for Warranty consideration. PennTex reserves the right to arrange special circumstances. PennTex pays regular ground-freight charges. Customer is responsible for added cost of airfreight charges or any nonstandard shipping method.

The implied warranties, which the law imposes on the sale of these products, are expressly limited in duration to the warranty periods specified on the Warranty Period Schedule listed above.

Under no circumstances shall PennTex be Liable for any incidental or consequential damages for breach of this warranty.

NOTE: Applications using low resistance batteries (spiral wound, dry-cell, etc.) have no applied warranty. Please call our toll-free Technical Hot Line at 877-590-7366 for assistance.

All specialty alternators used on welder, inverter, and special 24-volt & higher applications have a limited 12-month warranty that does not include any labor or freight allowance.

All Aftermarket replacements require product registration. The registration form that is supplied with PennTex products must be filled out and mailed or faxed back to the PennTex Manufacturing Plant location in Fort Worth, Texas. Warranty fax number; 817-590-0398.

PennTex does not authorize any obligation or liability in connection with these products. This warranty provides specific legal rights, and there may also be other rights, which vary from state to state.

CHARGING SYSTEMS RELATED FAILURES NOT COVERED BY WARRANTY

1. Any physical damage or previous unauthorized repair or modification.

2. Bearing failure due to loose belts or over-tight belt tensioners. (All pulleys must be returned with the failed alternator to the PennTex Manufacturing Plant location in Fort Worth, Texas for evaluation.)

3. Stripped or damaged threads, burned terminals or output post, and obvious mishandling or improper installation.

THIS WARRANTY DOES NOT APPLY IF IN THE SOLE JUDGMENT OF PENNTEX INDUSTRIES, INC., THE PRODUCT HAS BEEN DAMAGED DUE TO ACCIDENT, IMPROPER INSTALLATION, ADJUSTMENT, WIRING, NEGLECT, MISUSE, OR APPLICATION FOR WHICH IT IS NOT DESIGNED OR ALTERED IN ANY WAY SO AS TO AFFECT ADVERSELY ITS RELIABILITY AND PERFORMANCE. ALSO EXCLUDED FROM THIS WARRANTY ARE PARTS SUBJECT TO NORMAL WEAR- I.E. BRUSHES.

PennTex INDUSTRIES, INC.
FT. WORTH, TX MANCHESTER, PA
817-590-2818 sales@penntexusa.com
877-590-7366 www.penntexusa.com
Fax: 817-590-0505

INSTALLATION: PX-2 SERIES, PX-4G-5 SERIES & EARLY PX-5 SERIES WITH ONE POSITIVE POST

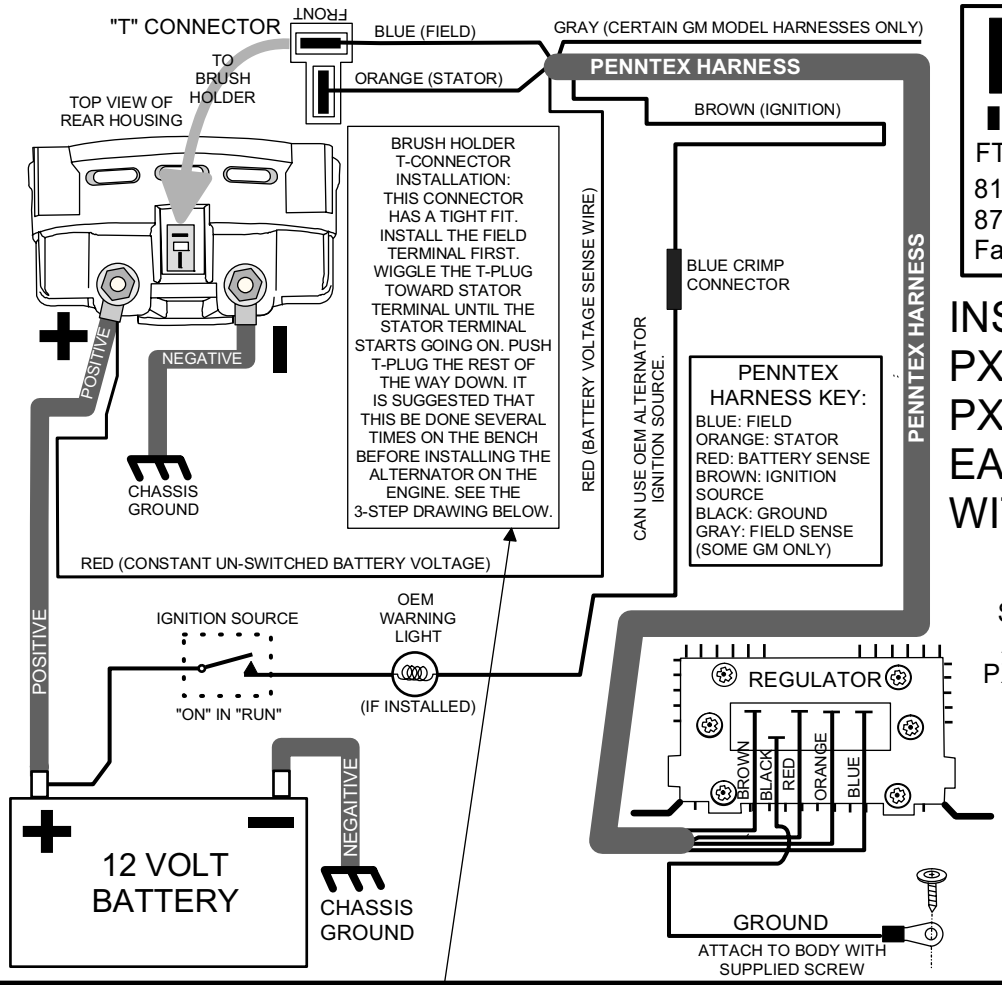

THIS IS A GENERIC WIRING SCHEMATIC FOR THE PX-2, PX-4G-5, AND EARLY SINGLE POSITIVE POST PX-5 ALTERNATORS. THIS DIAGRAM IS NOT SPECIFIC TO ANY CERTAIN MAKE, MODEL, OR ENGINE.

CONFIRM ENGINE TO CHASSIS GROUND & BODY TO CHASSIS GROUND WITH #2 AWG CABLE OR LARGER.

UPDATED 05-29-13

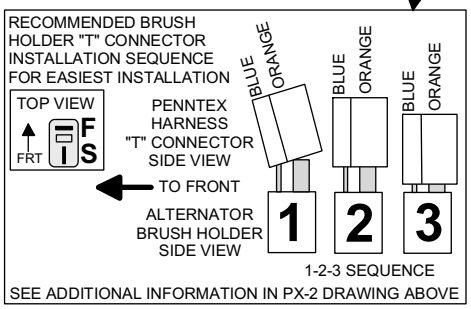

INSTALLATION: PX-5GD SERIES, PX-5RD SERIES, PX-5TD SERIES & PX-7RD SERIES WITH TWO POSITIVE POSTS

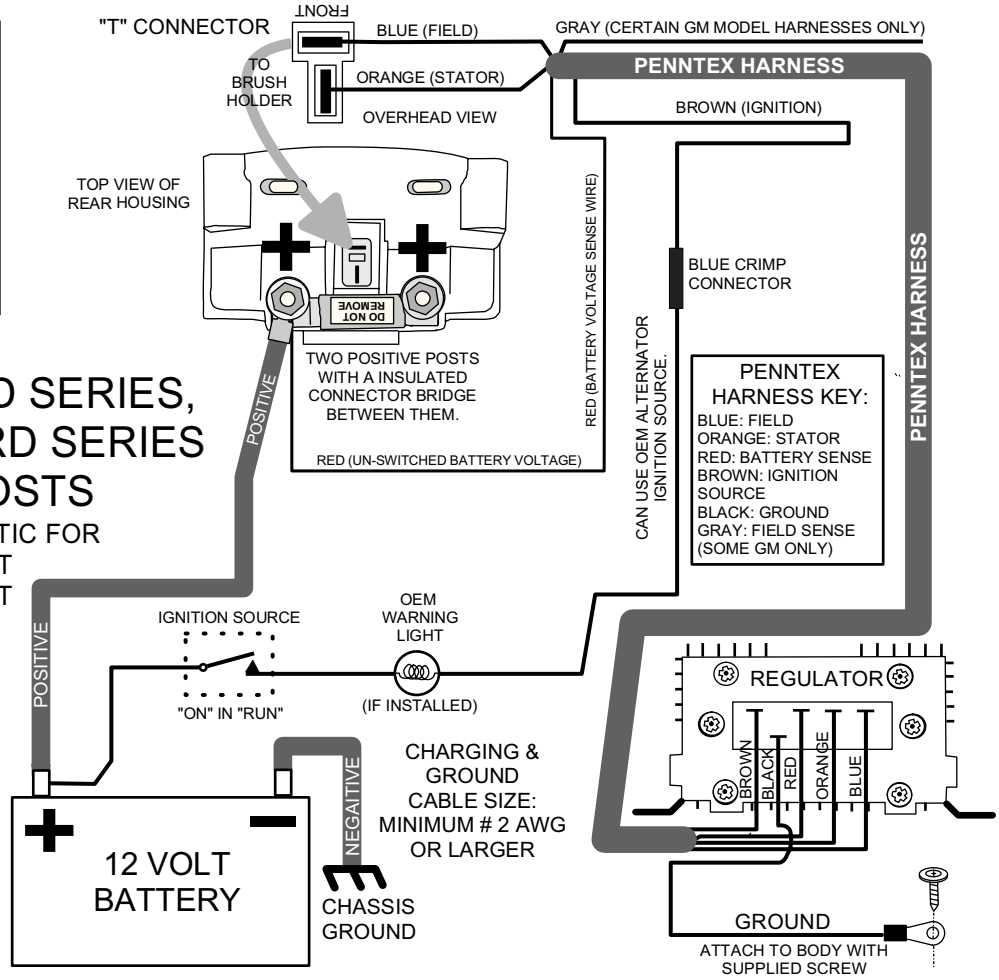

THIS IS A GENERIC WIRING SCHEMATIC FOR THE PX-5 & PX-7 DUAL POSITIVE POST ALTERNATORS. THIS DIAGRAM IS NOT SPECIFIC TO ANY CERTAIN MAKE, MODEL, OR ENGINE.

CONFIRM ENGINE TO CHASSIS GROUND & BODY TO CHASSIS GROUND WITH #2 AWG CABLE OR LARGER.

PENNTEX SELLS DIFFERENT MODEL CHARGING SYSTEMS FOR SPECIFIC VEHICLES. GO TO www.penntexusa.com OR CONTACT US AT 877-590-7366.

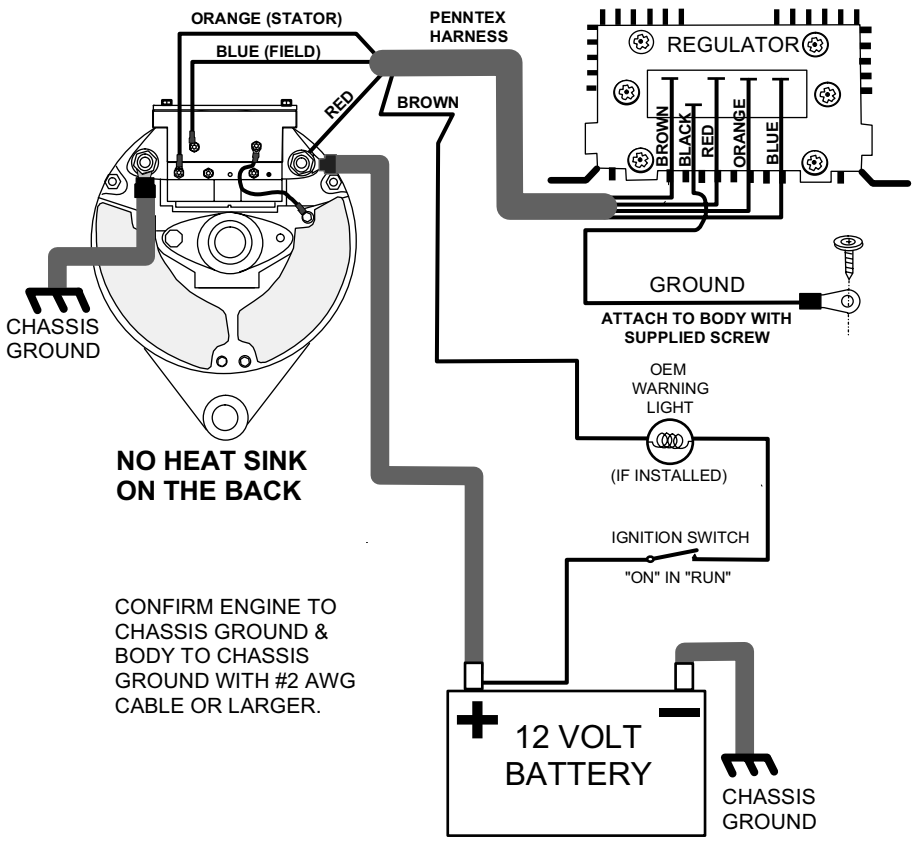

PennTex INDUSTRIES, INC.
FT. WORTH, TX MANCHESTER, PA
TOLL FREE: 877-590-7366
WEB SITE: www.penntexusa.com

DRAWING BY DMc UPDATED 08-06-07

INSTALLATION: PX-320 SERIES

THIS IS A GENERIC WIRING SCHEMATIC FOR THE PX-320S ALTERNATORS. THIS DIAGRAM IS NOT SPECIFIC TO ANY CERTAIN MAKE, MODEL, OR ENGINE.

CHARGING & GROUND CABLE SIZE: MINIMUM # 2 AWG OR LARGER

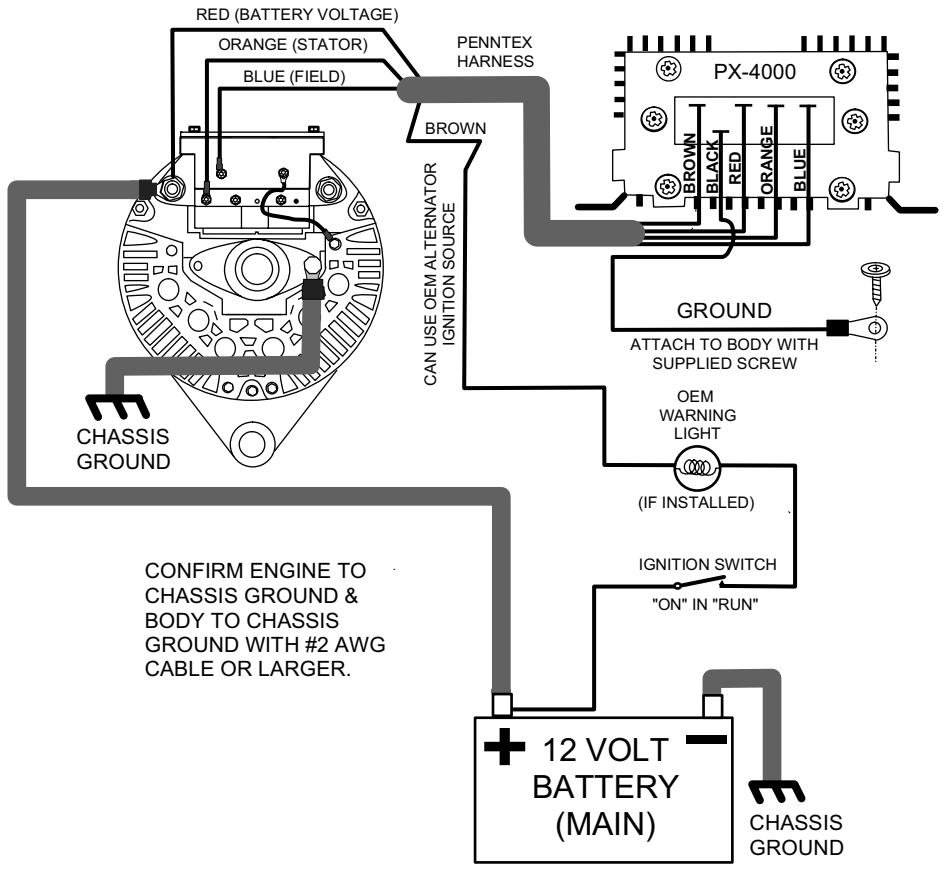

INSTALLATION: PX-328 & PX-330 SERIES

THIS IS A GENERIC WIRING SCHEMATIC FOR THE PX-328/330 ALTERNATORS. THIS DIAGRAM IS NOT SPECIFIC TO ANY CERTAIN MAKE, MODEL, OR ENGINE.

CHARGING & GROUND CABLE SIZE: MINIMUM # 2 AWG OR LARGER

DRAWING #:
REVISION #:

INSTALLATION: PX-421 SERIES 12-VOLT

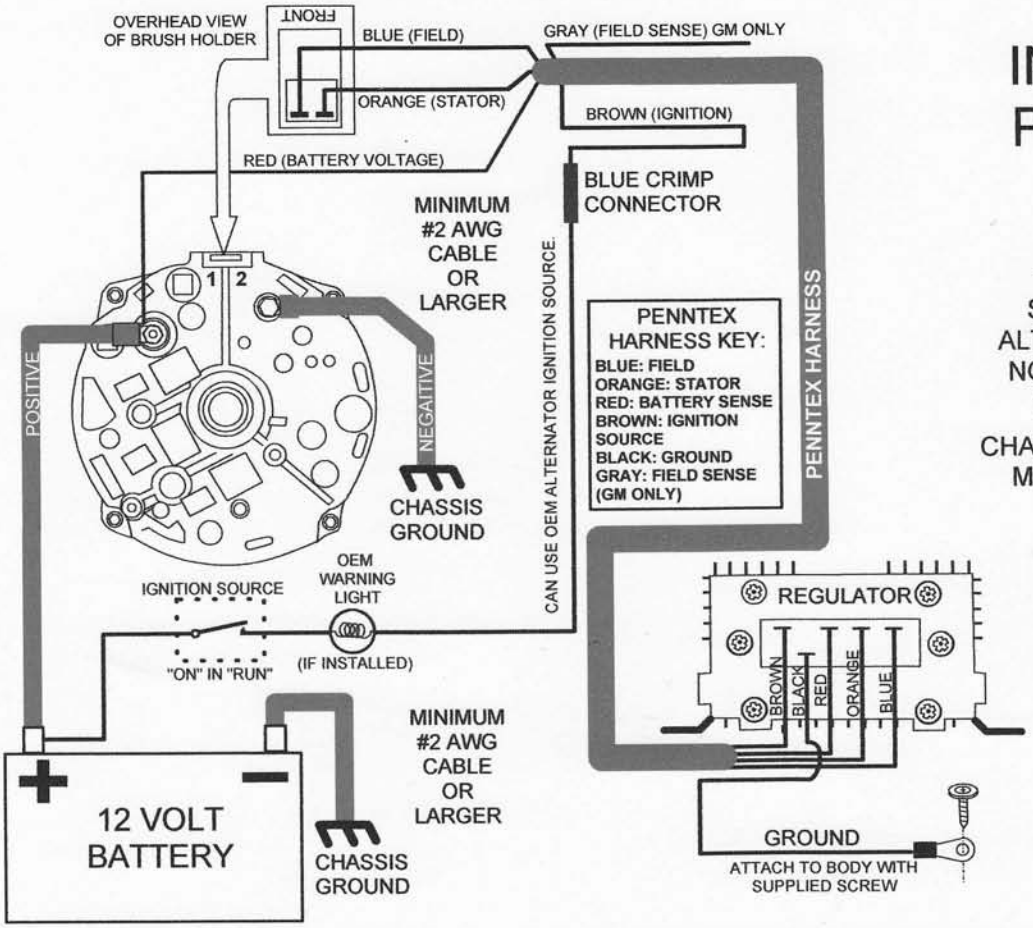

THIS IS A GENERIC WIRING SCHEMATIC FOR THE PX-421 ALTERNATORS. THIS DIAGRAM IS NOT SPECIFIC TO ANY CERTAIN MAKE, MODEL, OR ENGINE.

CHARGING & GROUND CABLE SIZE: MINIMUM # 2 AWG OR LARGER

CONFIRM ENGINE TO CHASSIS GROUND & BODY TO CHASSIS GROUND WITH #2 AWG CABLE OR LARGER.

INSTALLATION: PX-4V-220 SERIES

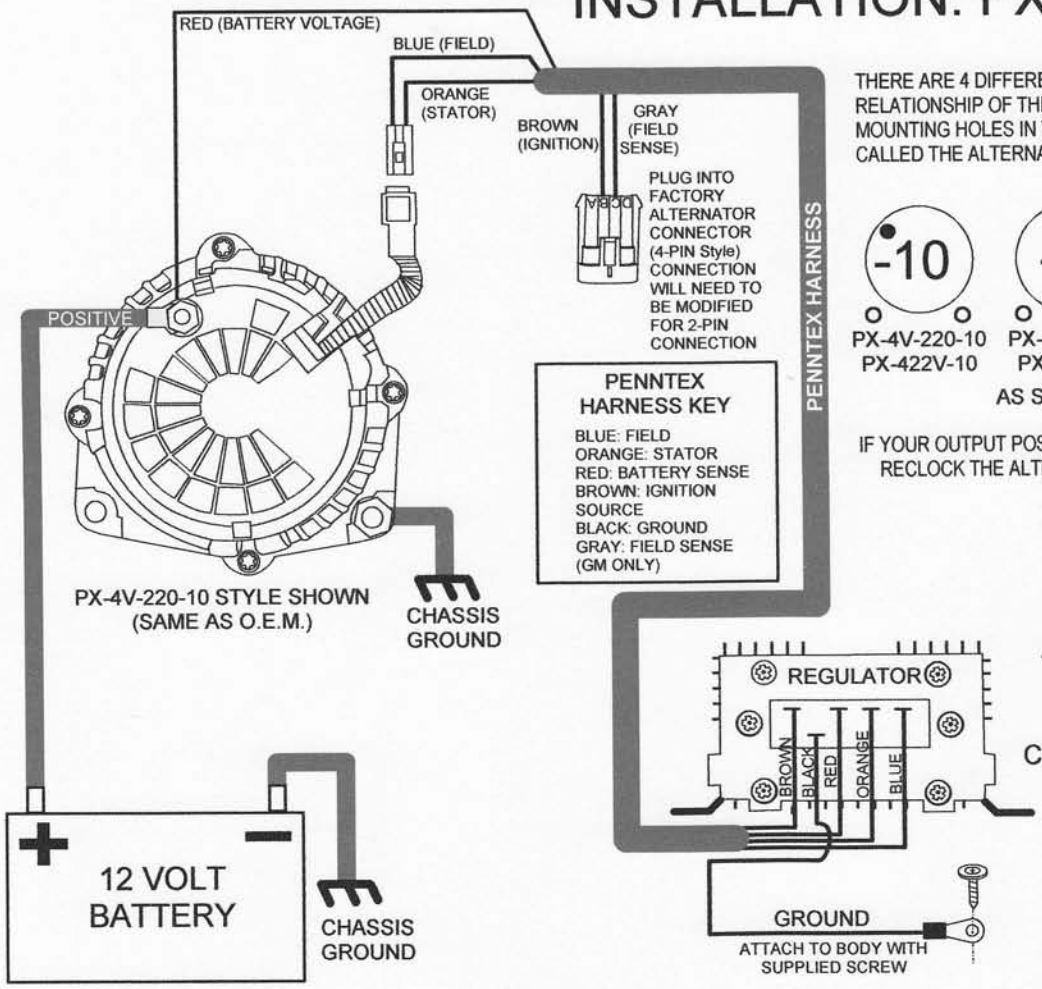

THERE ARE 4 DIFFERENT PX-4V-220 ALTERNATORS BASED ON THE RELATIONSHIP OF THE OUTPUT POST IN THE REAR HOUSING TO THE MOUNTING HOLES IN THE FRONT HOUSING FROM THE REAR. THIS IS CALLED THE ALTERNATOR CLOCK POSITION AS SEEN BELOW.

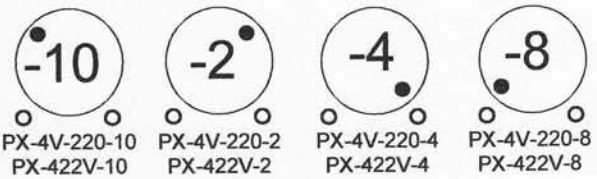

AS SEEN FROM THE REAR

IF YOUR OUTPUT POST CLOCKING NEEDS TO BE CHANGED, DO NOT RECLOCK THE ALTERNATOR. THE WARRANTY WILL BE VOIDED.

THIS IS A GENERIC WIRING SCHEMATIC FOR THE PX-422V ALTERNATORS. THIS DIAGRAM IS NOT SPECIFIC TO ANY CERTAIN MAKE, MODEL, OR ENGINE.

CHARGING & GROUND CABLE SIZE: MINIMUM # 2 AWG OR LARGER

CONFIRM ENGINE TO CHASSIS GROUND & BODY TO CHASSIS GROUND WITH #2 AWG CABLE OR LARGER.

INSTALLATION: PX-6 SERIES 12-VOLT

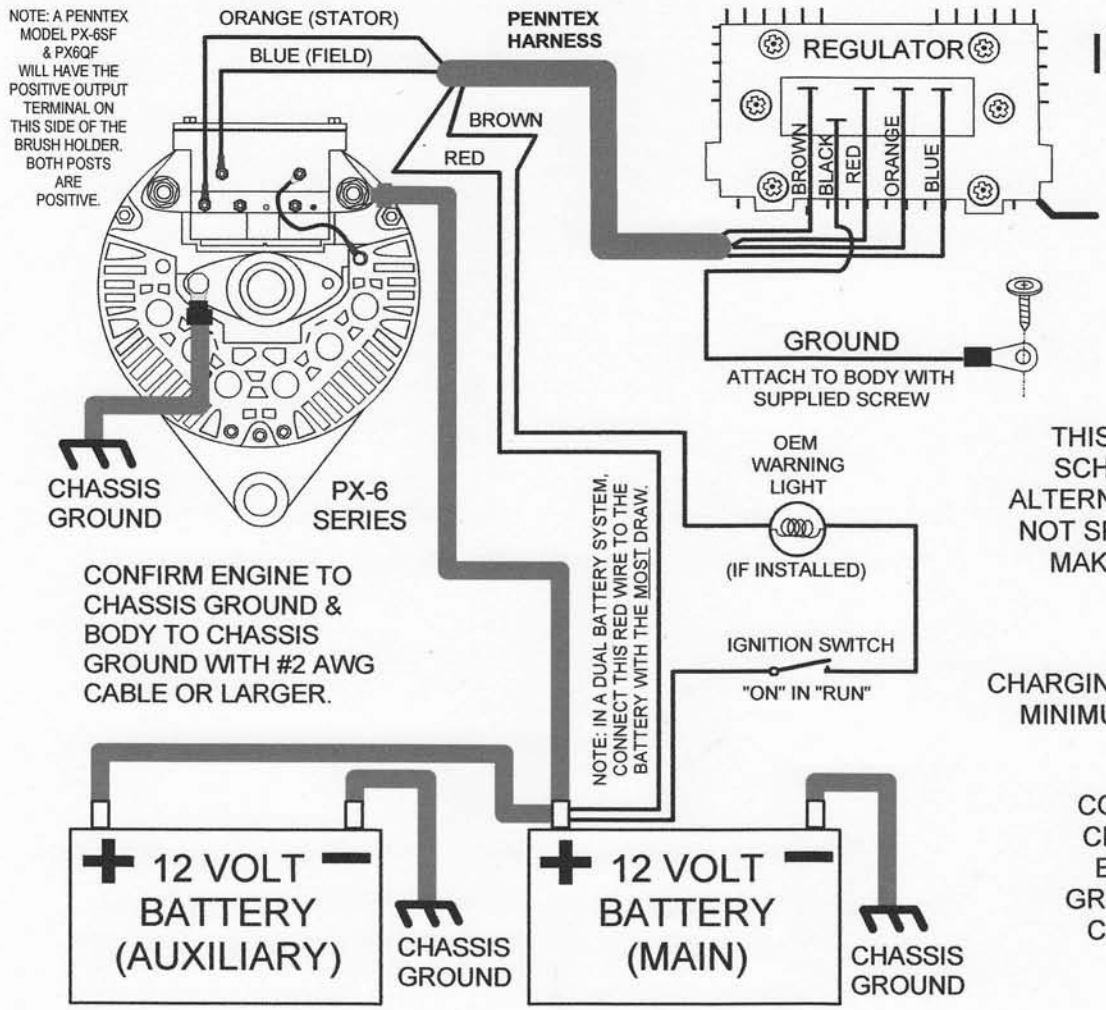

THIS IS A GENERIC WIRING SCHEMATIC FOR THE PX-6 ALTERNATORS. THIS DIAGRAM IS NOT SPECIFIC TO ANY CERTAIN MAKE, MODEL, OR ENGINE.

CHARGING & GROUND CABLE SIZE: MINIMUM # 2 AWG OR LARGER

CONFIRM ENGINE TO CHASSIS GROUND & BODY TO CHASSIS GROUND WITH #2 AWG CABLE OR LARGER.

PennTex INDUSTRIES, INC.
FT. WORTH, TX MANCHESTER, PA
TOLL FREE: 877-590-7366
WEB SITE: www.penntexusa.com
tech@penntexusa.com sales@penntexusa.com